H-1588

CERMOLOX®

1000 Watts PEP Output

37 dB Open Lood Third Order Distortion

42 dB Third Order Distortion w/Cathode R

Full Input to 400 MHz

Sturdy, Reliable

Matrix Oxide Cathode

RCA-8792

Beam Power Tube

The RCA-8792* is designed specifically to meet the high linearity and low noise requirements of modern HF, single sideband equipments. In these equipments it can deliver one kilowatt, peak envelope power output at an open loop, 3rd order distortion level of better than 37 dB and 5th order distortion level of better than 45 dB.

Its high gain, CERMOLOX tube construction also makes it ideally suited to modern FM broadcast equipment where it can deliver one kilowatt output at 70% efficiency with a gain of better than 20 dB.

It is equally well suited to VHF-TV applications where it will deliver over one kilowatt of peak sync power output, and to UHF, Class B linear service, where it will deliver 300 watts carrier power output.

The sturdy, coaxial, CERMOLOX tube construction minimizes tube inductances and feed-thru capacitances. This enables the use of simple, economical circuit techniques for HF and UHF operation and also minimizes induced noise problems in linear systems. Its efficient, forced-air-cooled radiator reduces blower noise problems and increases overall system efficiency, while the rugged matrix cathode increases system reliability.

*Formerly RCA Dev. No.A2887A.

General Data

Electrical:

Heater-Cathode:		
Type	Unipotential, Oxide Coated, Matrix Type	
Voltage[a] (ac or dc)	5.5 typ. / 5.8 max.	V
Current (@ 5.5 V)	17.3	A
Minimum Heating Time	180	s
Mu Factor[b] (Grid No.1 to Grid No.2)	6.5	
Direct Interelectrode Capacitances:		
Grid No.1 to Plate[c]	0.14	pF
Grid No.1 to Cathode-Heater	38	pF
Plate to Cathode-Heater[c]	0.02	pF
Grid No.1 to Grid No.2	52	pF
Grid No.2 to Plate	16	pF
Grid No.2 to Cathode-Heater[c]	1.4	pF

Mechanical:

Operating Position	Any
Maximum Length	(84.8 mm) 3.34 in
Greatest Diameter	(95.3 mm) 3.75 in
Terminal Connection	See *Dimensional Outline*
Socket	See page 7
Radiator	Integral part of tube
Weight (approx.)	(0.9 kg) 2 lbs

Thermal:

Seal Temperature[d] (Plate, Grid No.1, Grid No.2 Cathode-Heater, and Heater)	250 max. °C
Plate Core Temperature[d]	250 max. °C

Footnotes for General Data

[a] See Section V.A. 3 of 1CE-300.

[b] For: plate voltage = 2500 V
grid No.2 voltage = 600 V
plate current = 600 mA

[c] With special shield adapter.

[d] See Dimensional Outline for temperature measurement points.

This bulletin gives application information unique to the RCA-8792. General information, covering the installation and operation of this tube type, is given in the **"Application Guide for RCA Power Tubes"**, 1CE-300. Close attention to the instructions contained therein will assure longer tube life, safer operation, less equipment downtime, and fewer tube handling accidents.

Information furnished by RCA is believed to be accurate and reliable. However, no responsibility is assumed by RCA for its use; nor for any infringements of patents or other rights of third parties which may result from its use. No license is granted by implication or otherwise under any patent or patent rights of RCA.

RCA Electronic Components

Trademark(s) ® Registered
Marca(s) Registrada(s)

Printed in U.S.A. | 3-68

Linear RF Power Amplifier[e]

Single-Sideband, Suppressed-Carrier Service

Peak envelope conditions for a signal having a minimum peak-to-average power ratio of 2.

Maximum CCS Ratings, *Absolute-Maximum Values:*

	up to 400 MHz	
DC PLATE VOLTAGES[f]	3500 max.	V
DC GRID-No.2 VOLTAGE[g]	1000 max.	V
DC PLATE CURRENT AT PEAK OF ENVELOPE	1.25 max.	A
GRID-No.2 INPUT[g]	50 max.	W
PLATE DISSIPATION	1.5 max.	kW

Maximum Circuit Values:

Grid-No.1-Circuit Resistance Under Any Condition:	
With fixed bias	5000 max. Ω
With cathode bias	Not recommended
Grid-No.2 Circuit Impedance	See note g
Plate Circuit Impedance	See note f

Typical Class AB_1 CCS Operation with "Two-Tone" Modulation

In a grid-drive circuit at 30 MHz

DC Plate Voltage	2500	2500	V
DC Grid-No.2 Voltage	600	600	V
DC Grid-No.1 Voltage[h]	-65	-61	V
Zero-Signal DC Plate Current	0.5	0.6	A
Effective RF Load Resistance	1050	1050	Ω
DC Plate Current at Peak of Envelope	1.0	1.1	A
Average DC Plate Current	0.75	0.85	A
DC Grid-No.2 Current at Peak of Envelope	-0.020	-0.022	A
Average DC Grid-No.2 Current	-0.014	-0.017	A
Peak RF Grid Voltage	50	47	V
Output Circuit Efficiency (Approx.)	90	90	%
Useful Power Output (Approx.):			
Average	530	600	W
Peak Envelope	1060	1200	W
Distortion Products Level[i]			
Third Order	35	37	dB
Fifth Order	45	47	dB

RF Power Amplifier & Oscillator–Class C Telegraphy[e] and RF Power Amplifier–Class C FM Telephony[e]

Maximum CCS Ratings, *Absolute-Maximum Values:*

	up to 400 MHz	
DC PLATE VOLTAGE[f]	3500 max.	V
DC GRID-No.2 VOLTAGE[g]	1000 max.	V
DC GRID-No.1 VOLTAGE[k]	-300 max.	V
DC PLATE CURRENT	1.0 max.	A
DC GRID-No.1 CURRENT	0.2 max.	A
GRID-No.2 INPUT[g]	50 max.	W
PLATE DISSIPATION	1500 max.	W

Maximum Circuit Values:

Grid-No.1-Circuit Resistance	5000 max. Ω
Grid-No.2-Circuit Impedance	See note g
Plate-Circuit Impedance	See note f

Calculated CCS Operation:

In a grid-drive citcuit at 108 MHz with an output circuit bandwidth of 2.0 MHz[n]

DC Plate Voltage	3350 V
DC Grid-No.2 Voltage	500 V
DC Grid-No.1 Voltage	-120 V
DC Plate Current	0.55 A
DC Grid-No.2 Current	-0.010 A
DC Grid-No.1 Current	0 A
Drive Power (Approx.)	15 W
Output-Circuit Efficiency (Approx.)	95 %
Useful Power Output	1250 W

Linear RF Power Amplifier[e]
Class AB or Class B Telephony

Carrier conditions for use with a maximum modulation factor of 1.0

Maximum CCS Ratings, *Absolute-Maximum Values:*

DC PLATE VOLTAGE[f]	3500 max.	V
DC GRID-No.2 VOLTAGE[g]	1000 max.	V
DC PLATE CURRENT	700 max.	mA
GRID-No.2 INPUT	50 max.	W
PLATE DISSIPATION	1500 max.	W

Calculated CCS Operation as a Class AB_1 Amplifier:

In a cathode drive circuit at 400 MHz with an output circuit bandwidth of 3.5 MHz[n]

DC Plate Voltage	2600	V
DC Grid-No.2 Voltage[g]	500	V
DC Grid-No.1 Voltage[m]	-65	V
DC Plate Current	550	mA
DC Grid-No.1 Current	0	A
DC Grid-No.2 Current	-10	mA
Drive Power (Approx.)	25	W
Output Circuit Eff. (Approx.)	90	%
Useful Power Output	300	W

Grid-Modulated RF Power Amplifier[e] –
Class C Television Service

Synchronizing-level conditions per tube unless otherwise specified

Maximum CCS Ratings, *Absolute-Maximum Values:*

	Up to 400 MHz	
DC PLATE VOLTAGE[f]	3500 max.	V
DC GRID-No.2 VOLTAGE[g]	1000 max.	V
DC PLATE CURRENT	1.25 max.	A
GRID-No.2 INPUT	50 max.	W
PLATE DISSIPATION	1500 max.	W
GRID-No.1 CURRENT	200 max.	mA

Typical Operation in Grid-Drive Circuit at 216 MHz

	Bandwidth[p] of 6.0 MHz	
DC Plate Voltage	2500	V
DC Grid-No.2 Voltage	500	V
Peak RF Grid-No.1 Voltage:		
Synchronizing level	80	V
Pedestal level	60	V
DC Grid-No.1 Voltage	-70	V
DC Plate Current:		
Synchronizing level	1.2	A
Pedestal level	0.9	A
DC Grid No.2 Current Pedestal level	-40	mA
DC Grid-No.1 Current (Approx.):		
Synchronizing level	5.0	mA
Pedestal level	00	A
Driver Power Output (Approx.):		
Synchronizing level	110	W
Pedestal level	65	W
Useful Power Output (Approx.):		
Synchronizing level	1350	W
Pedestal level	750	W

Footnotes for Ratings

[e] See Section V.C. of 1CE-300.

[f] See Section V.B. and V.B.1 of 1CE-300.

[g] See Section V.B.2 of 1CE-300.

[h] Adjust to specified zero-signal DC plate current.

[i] The figures for 3rd and 5th order distortion levels are based upon operation with no feedback or neutralization employed to enhance performance. This performance can be improved by approximately five dB by the insertion of a ten ohm, unbypassed cathode resistor. See also Section V.C.2.c.(1) of 1CE-300.

[k] See Section V.B.3 of 1CE-300.

[m] Adjust for zero-signal DC plate current of 0.2 A.

[n] Computed between half-power points using two times tube capacity.

[p] Measured at the -1.0 dB point of a double tuned output circuit.

Typical Constant Current Characteristics

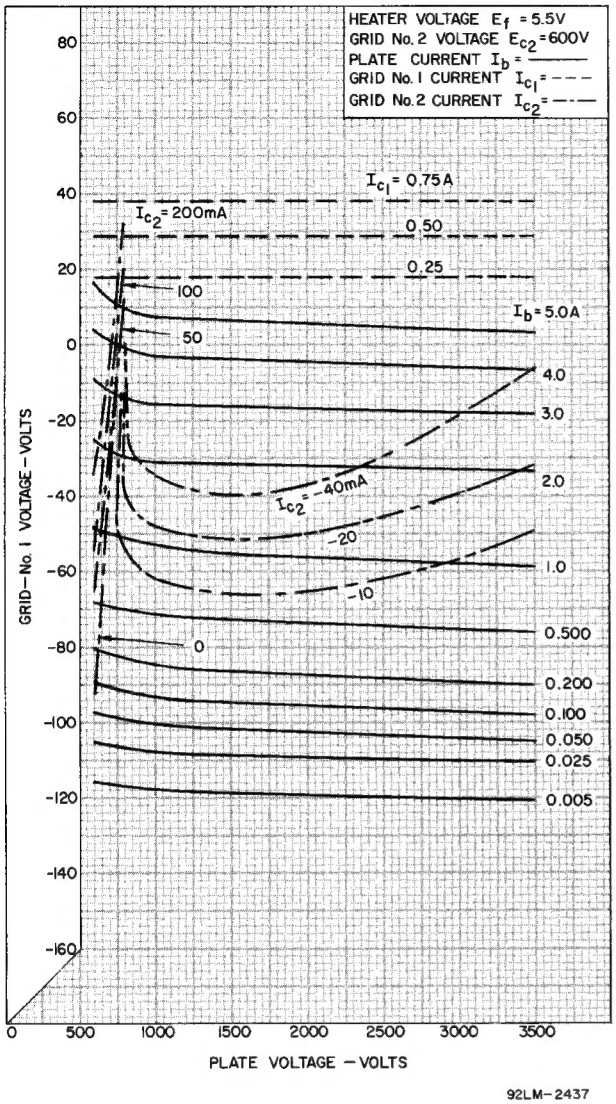

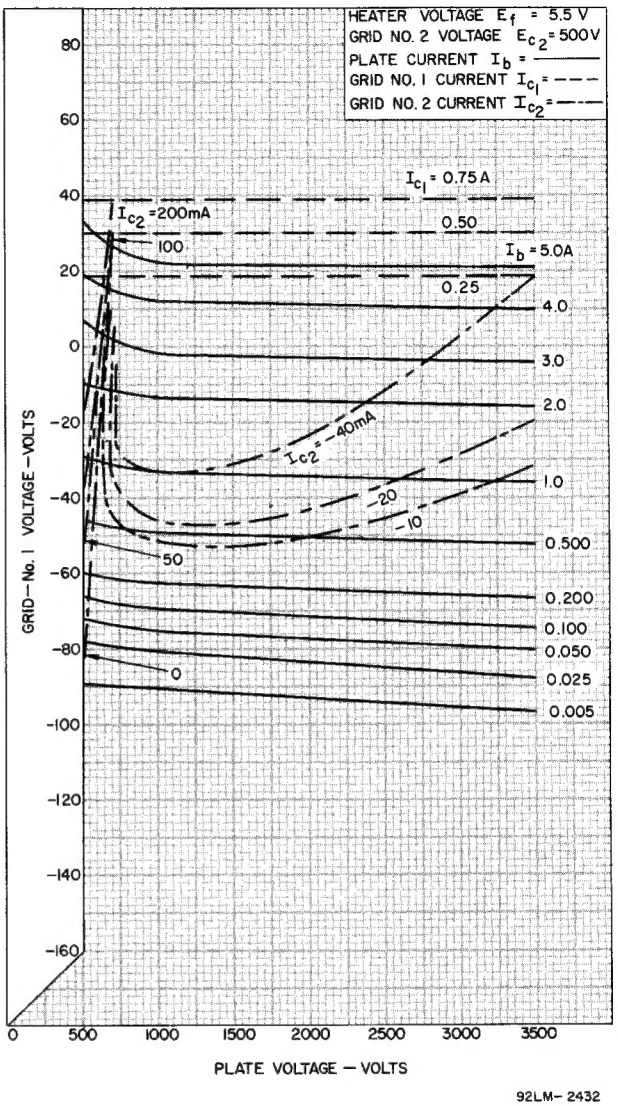

Electrode Cavity Tuning Characteristics

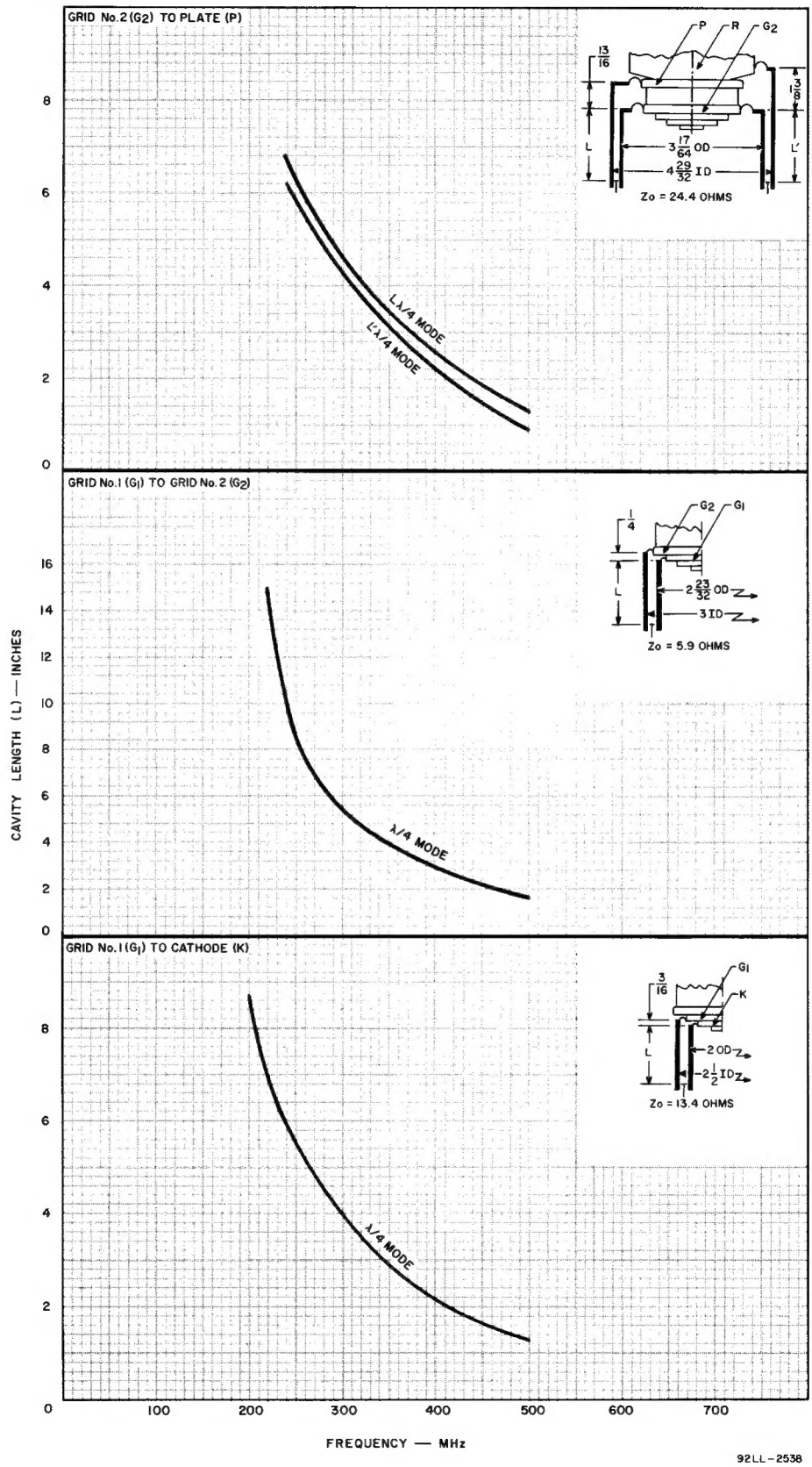

Dimensional Outline

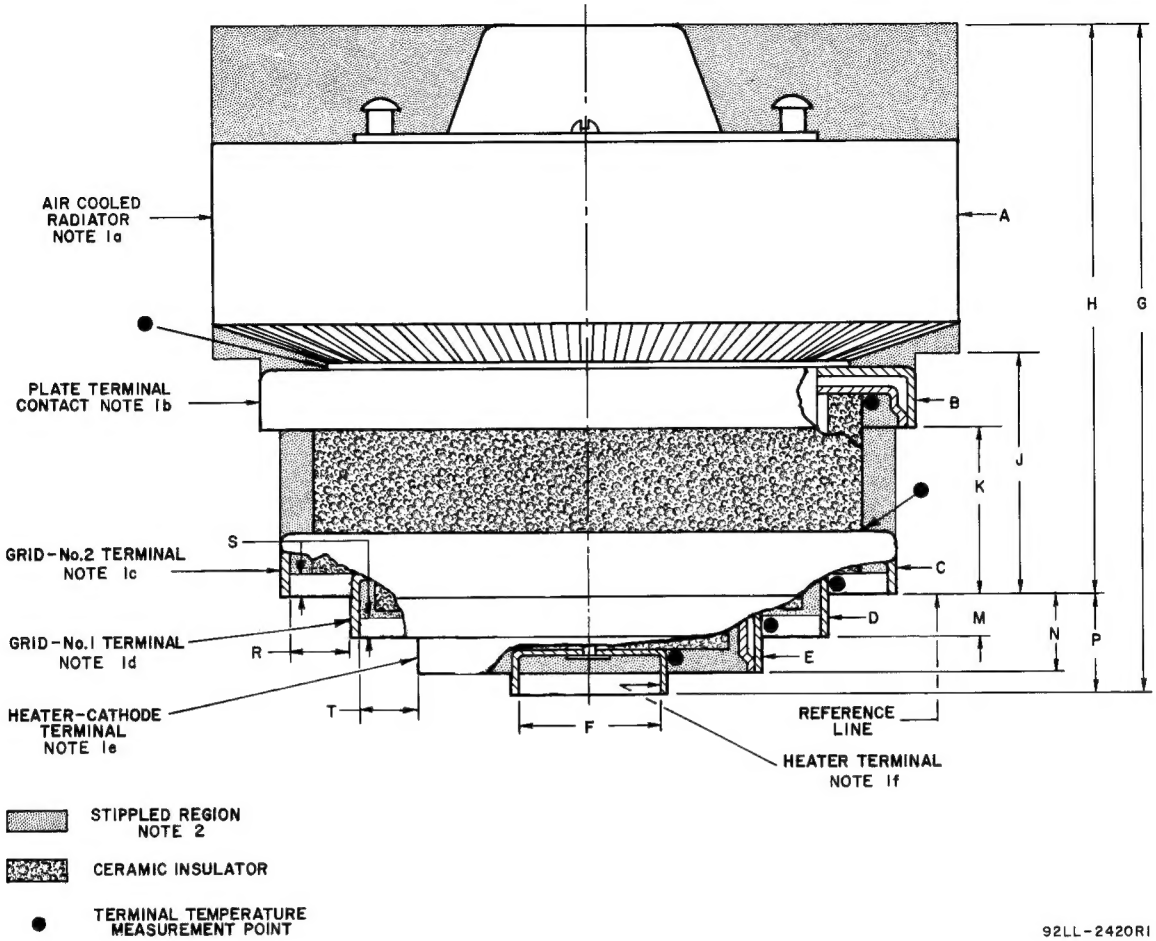

Tabulated Dimensions*

Dim.	Value			
A	3.72 ± .03	(94.49 ± .76)	Dia.	
B	3.210	(81.54)	Dia.	Min.
C	3.010	(76.45)	Dia.	Min.
D	2.307	(58.60)	Dia.	Min.
E	1.710	(43.44)	Dia.	Min.
F	0.725	(18.41)	Dia.	Max.
G	3.24 ± .10	(82.3 ± 2.5)		
H	2.78 ± .07	(70.61 ± 1.78)		
J	$1.160\ ^{+.005}_{-.000}$	$(29.464\ ^{+.127}_{-.000})$		
K	0.82 ± .03	(20.83 ± .76)		
M	0.200 ± .025	(5.08 ± .63)		
N	0.37 ± .03	(9.40 ± .76)		
P	0.46 ± .03	(11.68 ± .76)		
R	0.250	(6.35)		Min.
S	0.105	(2.66)		Min.
T	0.200	(5.08)		Min.

*Dimensions are in inches unless otherwise stated. Dimensions in parentheses are in millimeters and are derived from the basic inch dimensions (1 inch = 25.4 mm).

Note 1: The contact distance* indicated is the minimum uniform length as measured from the edge of the terminal. Concentricity between the various diameters is maintained within such tolerances that the tube will enter a gauge having suitably spaced, concentric apertures or post of the indicated diameters*.

	Contact Distance	Gauge Diameter
1.a Radiator	0.850 (21.59)	3.7805 (96.024)
1.b Plate Terminal	0.220 (5.59)	3.2605 (82.816)
1.c Grid No.2 Terminal	0.220 (5.59)	3.0605 (77.736)
1.d Grid No.1 Terminal	0.175 (4.45)	2.3375 (59.372)
1.e Heater-Cathode Terminal	0.115 (2.92)	1.7445 (41.310)
1.f Heater Terminal (post)	0.135 (3.43)	0.6945 (17.640)

Note 2: Keep all stippled regions clear. In general do not allow contacts to protrude into these annular regions. If special connectors are required which may intrude on these regions, contact RCA Power Tube Application Engineering, Lancaster, Pa., for guidance.

Mounting

See the preferred mounting arrangement below. See section III.C.3.a of 1CE-300 for a description of the fixed method of mounting. The adjustable method is not recommended for the 8792. Special sockets are available.

Preferred Mounting Arrangement and Layout of Associated Contacts

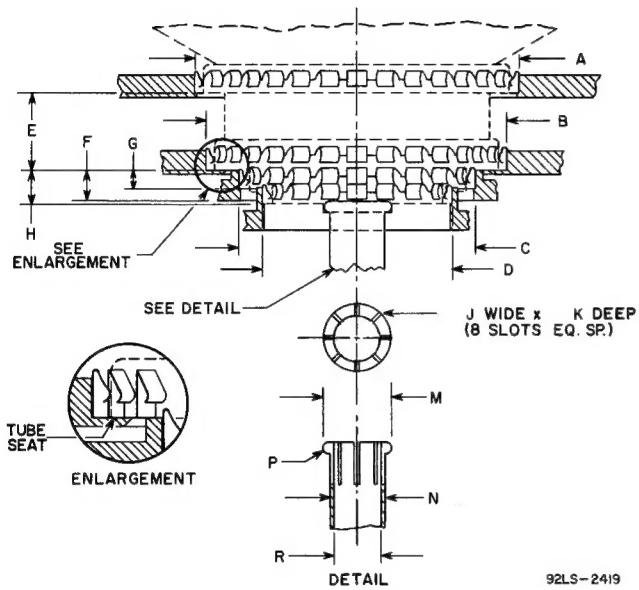

Note: Finger stock is No.97-360A made by Instrument Specialities Co., Little Falls, N.J.

Sockets may be obtained from:

Erie Technological Products, Inc.
644 West 12th Street, Erie, Pa. 16512

Jettron Products Incorporated
56 Route 10, Hanover, N.J. 07936

Tabulated Dimensions*

Dim.	Value	
A	3.425 (87.00)	Dia.
B	3.210 (81.53)	Dia.
C	2.505 (63.63)	Dia.
D	1.912 (48.56)	Dia.
E	0.820 (20.83)	
F	0.330 (8.38)	
G	0.200 (5.08)	
H	0.370 (9.40)	
J	0.025 (0.64)	
K	0.500 (12.70)	
M	0.725 (18.42)	Dia.
N	0.594 (15.09)	Dia.
P	0.062 (1.57)	Radius
R	0.500 (12.70)	Dia.

*Dimensions are in inches unless otherwise stated. Dimensions in parentheses are in millimeters and are derived from the basic inch dimensions (1 inch = 25.4 mm).

Tube Extractor Suggested Design

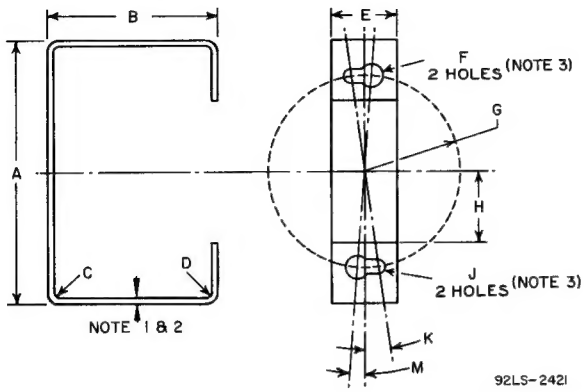

Notes:

1. Material 1/16" thick cold rolled steel
2. Round all edges
3. Slot between holes

Tabulated Dimensions*

Dim.	Value		
A	2.8	(71.)	
B	1.8	(46.)	
C	0.06	(1.5)	Radius
D	0.06	(1.5)	Radius
E	0.7	(18.)	
F	0.250 ± .005	(6.350 ± .127)	Dia.
G	1.015 ± .005	(25.781 ± .127)	Radius
H	0.75	(19.)	
J	0.140 ± .005	(3.556 ± .127)	Dia.
K	8.3°	0.145 radians	
M	4.5°	0.078 radians	

Typical Cooling Characteristics

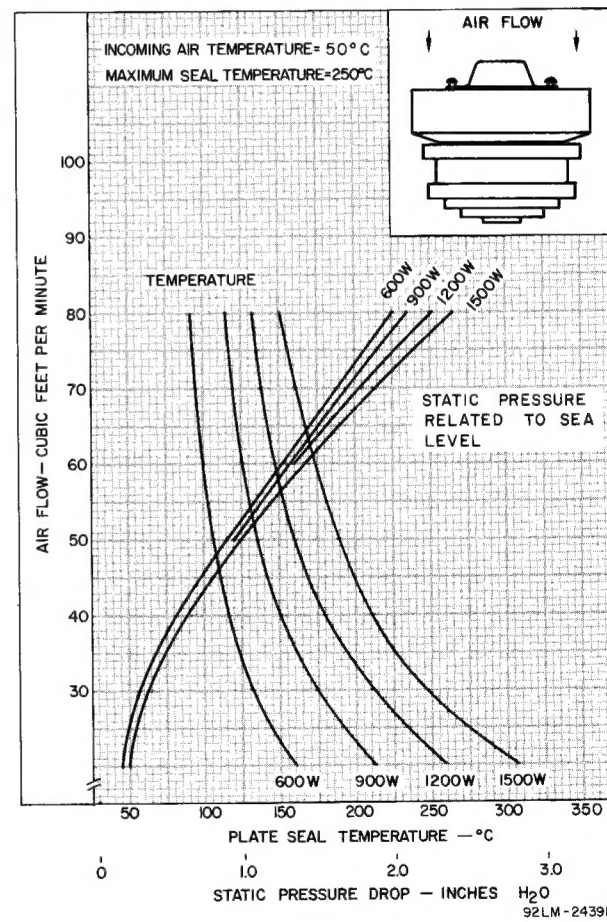

Forced-Air Cooling

Air Flow:

Through radiator – Adequate air flow to limit the plate-core temperature to 250° C should be delivered by a blower through the radiator before and during the application of filament, plate, grid-No.2, and grid-No.1 voltages. In typical operation at 1500 watts, plate dissipation, and 225° C plate seal temperature, 29 cfm at 0.35 inches of water at 28°C ambient air temperature should be sufficient.

To Plate, Grid-No.2, Grid-No.1, Cathode-Filament, and Filament Terminals – A sufficient quantity of air should be allowed to flow past each of these terminals so that their temperature does not exceed the specified maximum value of 250° C.

During Standby Operation – Cooling air is required when only filament voltage is applied to the tube.

During Shutdown Operation – Air flow should continue for a few minutes after all electrode power is removed.

For further information on forced-air cooling, see section IV.C of ICE-300.